Scientific Research Institute
Scientific Industrial Association
"LUCH"

НИИ НПО "ЛУЧ"

STATE CORPORATION "ROSATOM"
ГОСУДАРСТВЕННАЯ КОРПОРАЦИЯ ПО АТОМНОЙ ЭНЕРГИИ «РОСАТОМ»

The experimental reactor facility for test application of high temperature fuel rod structural elements.

AUTHORS: Androsov A., Kolesnikov *E.*, *Sericov V.*, *Solntceva Ekaterina*, Stepanchikov *P.*, *Vybyvanets V.*

tel. + 7 495 500-50-12 ,
fax + 7 495 543-33-63
e-mail: npo@sialuch.ru,
site: www.luch.podolsk.ru

Introduction

To substantiate the feasibility of dense (UPu)N fuel elements for FBR an experimental reactor facility has been developed for obtaining the data on radiation behavior of fuel and structural materials (kinetics of fission gas release (FGR), swelling, etc) in course of express in-pile tests

Aim

To develop the experimental facility capable of carrying out a reactor test under conditions, closest to normal fuel rod operational conditions, and allowing to control the composition and rate of FGR from the fuel core on-line

In order to support the experimental facility operability, out of pile researches were carried out: investigation of thermo-chemical stability and thermal characteristics of one of the objects of study - mononitride uranium fuel, one of a promising fuel rod material for space nuclear power & propulsion systems and NPPs.

These investigations were carried out at extreme temperatures to assess the consequences of potential accidents in the course of the in-pile tests.

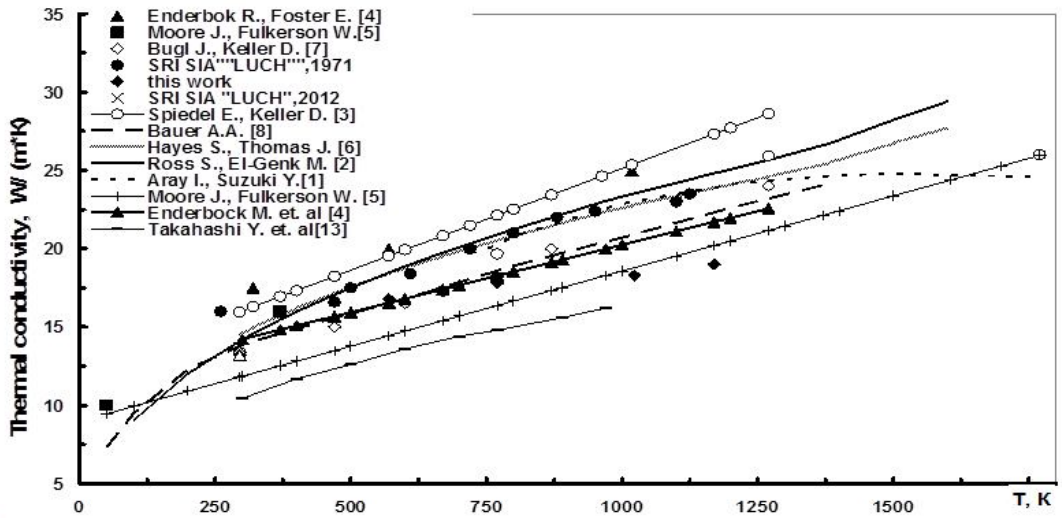

Thermal conductivity of UN [2]

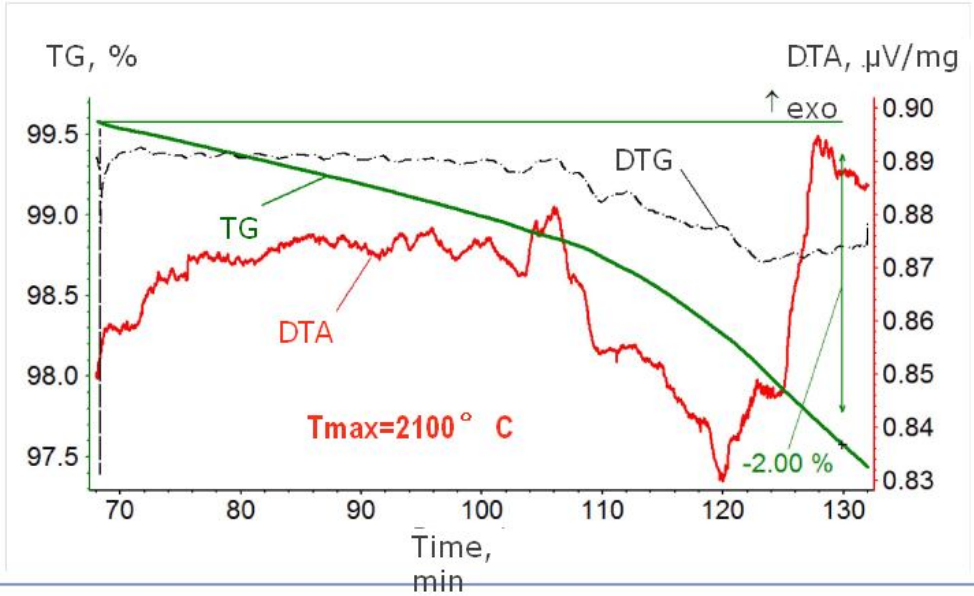

Thermochemical stability investigation [3]

The experimental reactor facility [1]

The main idea of the reactor test efficiency concept is to make up experimental reactor facility for test application using the basic structural materials, whose irradiation behavior is not studied completely.

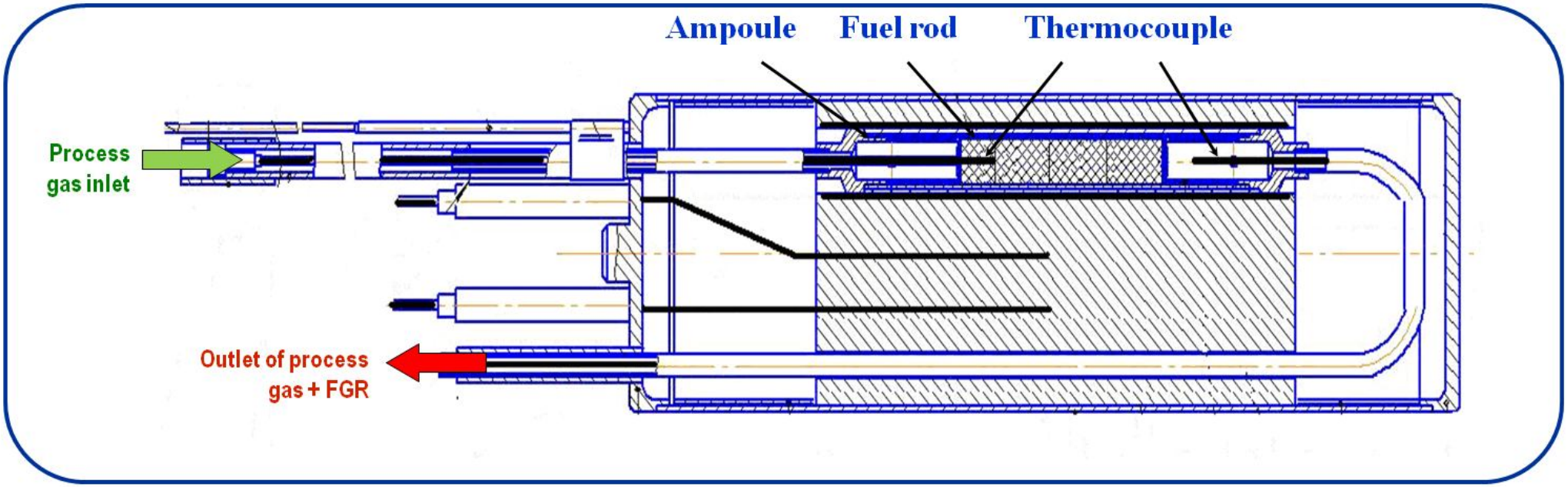

The ampoule appearance

For example, experimental reactor facility containing mononitride uranium fuel pins with claddings made of single crystal tungsten, and tungsten-rhenium thermocouples, was developed and tested under neutron irradiation. All these materials are also considered as structural materials for high-temperature reactors.

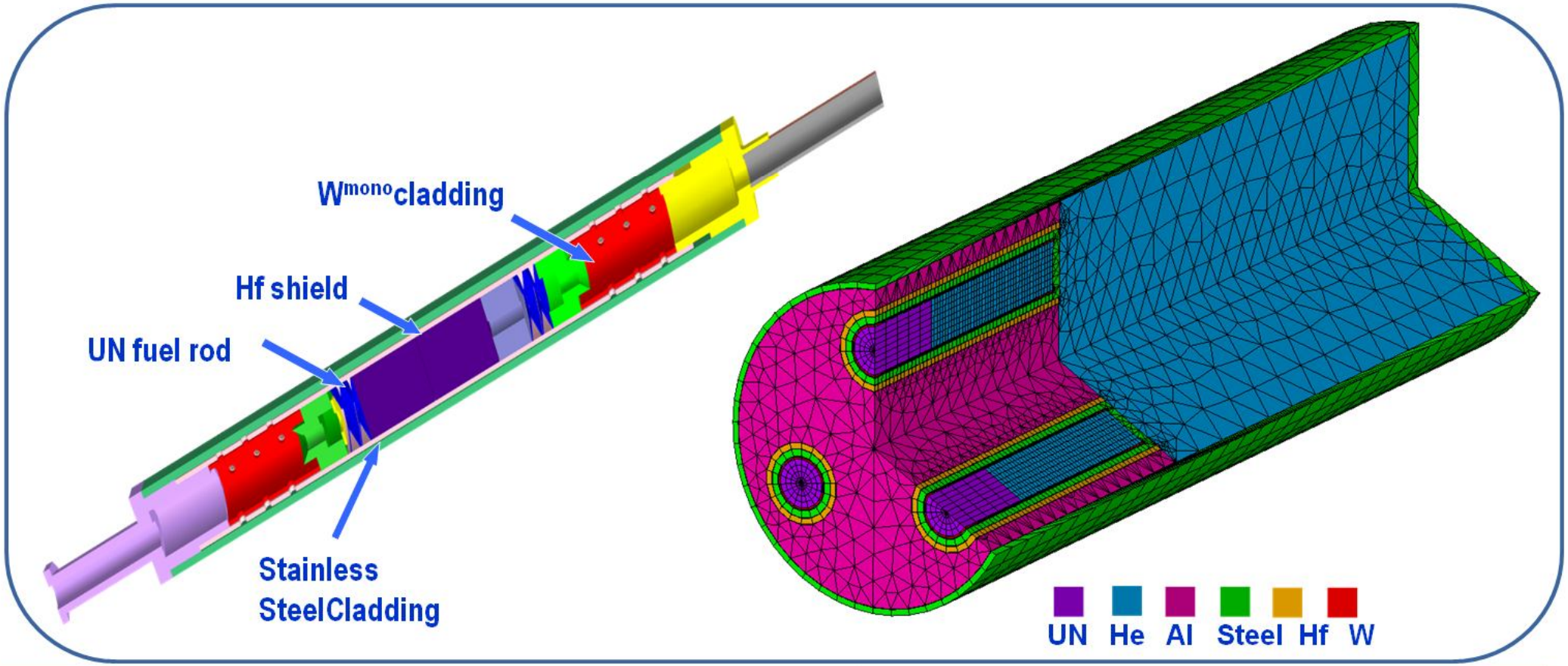

Conclusion

Efficiency of the experimental facility was estimated by the values of FGR outlet rate and reference points of fuel swelling at elevated temperatures.

At the post-irradiation examination stage it's supposed to investigate characteristics (e.g. swelling kinetics and microstructural defects evolution) and properties (mechanical and thermal) of fuel compositions.

References

1. Solntceva E.S., Vybyvanets V.I. et al., "In-pile test of mononitride fuel", Proc. of the X Russian conference on reactor materials, May 27-31, 2013, Dimitrovgrad, Russia, 2013.
2. Solntceva E.S., Taubin M.L., Baranov V.G. et al., "Research of Thermal Conductivity of Perspective Fuel Based on UN", Proc. of the ICANSE-2013, September 16-19, 2013, Denpasar, Indonesia.
3. Baranov V.G., Solntceva E.S., Taubin M.L. et al., ""Thermochemical stability of uranium nitride", Proc. of the ICANSE-2013, September 16-19, 2013, Denpasar, Indonesia.
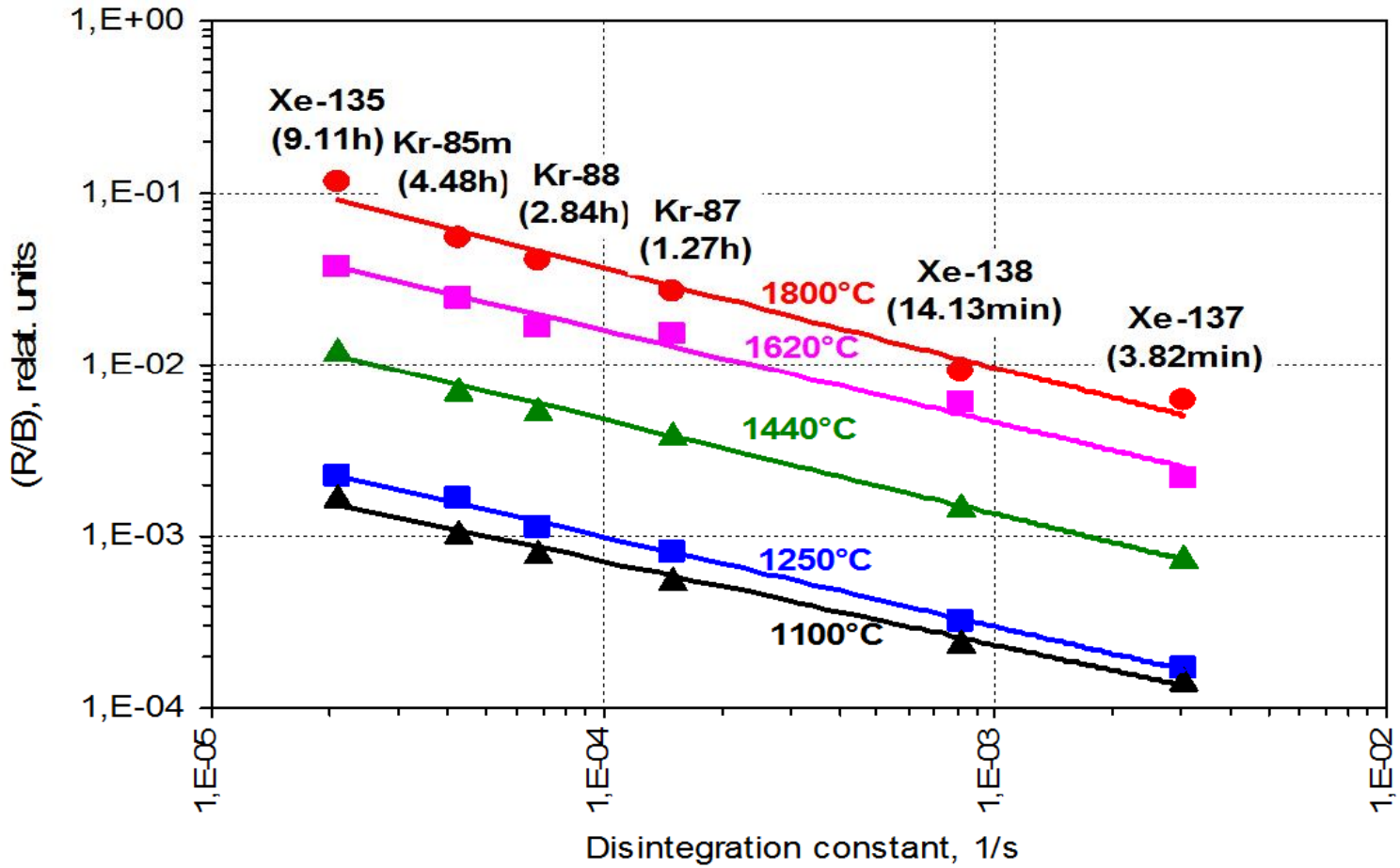
Fission gas release rate [1]